ALL WEATHER
ARCHITECTURAL ALUMINUM

SERIES 6100 WINDOW SYSTEM

PRODUCT SPECIFICATIONS | EXTRUSION DETAILS | TEST REPORTS

777 Aldridge Road | Vacaville, CA 95688 | 800.680.5800 | **www.allweatheraa.com**

SERIES 6100
3 ¾" THERMALLY OPTIMIZED WINDOW SYSTEM

INTRODUCTION

Our Series 6100 window line is an outside glazed, project out window system designed to meet lofty energy and structural performance goals. It is a strutted system, meaning two separate aluminum profiles are mechanically joined using a glass fiber reinforced polyamide thermal break.

The Series 6100 is available in the following finishes:

- Class I Clear Anodized**
- Class I Bronze Anodized**
- Standard White
- Custom Anodized
- 70% Kynar Paint Color

A combination of the above finishes on the Interior vs. Exterior.
Before the interior and exterior profiles are joined with the thermal strut, they can be painted or anodized with separate colors for a two-toned window.

*** Indicates Finishes In Stock.*

TESTING

Our Series 6100 windows have been tested to the AAMA 101 performance grades listed below: (Test report copies are in the back of this section)

- Fixed – CW60
- Casement – CW60
- Awning – CW30

CONSTRUCTION

The frame and vent corners are joined using top of the line European corner keys. We use both hollow and groove corner keys to provide maximum structural rigidity. TDL bars are attached using corner keys as well as screw-spline connections. The frame sill, vents and TDL bars contain weep provisions for water performance.

HARDWARE

Projected and Casement Windows: Both casements and awnings use heavy duty concealed hinges that are invisible when the window is closed. There are two operator options available: Truth Encore Roto and Fapim OUT limited opening. Both operators can be used in casements and awnings and can be mixed to meet project needs.

SCREENS

This system uses an extruded aluminum screen with corner key construction. Screens are retained using leaf springs at the corners and fit into a feature on the window frame. There is no fabrication required to attach screens.

SERIES 6100
3 ¾" THERMALLY OPTIMIZED WINDOW SYSTEM (CONTINUED)

GLAZING

The Series 6100 is available with 1" and 1.25" OA insulated glass units to yield a wide range of energy performance as needed.

WEATHER-STRIPPING

The 6100 Series windows all use foam bulb seals as well as a central gasket in casements/awnings. Operable units have 3 weather strip locations which creates excellent resistance to water penetration. All weatherstrip can be field serviced in the field should damage occur.

INSTALLATION GUIDELINES

- All windows must be installed in prepared openings in accordance with AAMA recommendations and the below-listed manufacturers' recommendations (If shop drawings are required, please refer to approved shop drawings for installation):
- All vent panels must be closed and locked.
- Each unit must be installed level, plumb and square with a ¼" clearance on the jambs and the header of the window.
- Remove wet plaster, mortar, stucco and cement immediately. (Note: windows should only be cleaned with mild soap and water.)
- Do not set items on the sill.
- In nail-on applications, a bead of caulking material should be applied to the inside nail-on fin just before installation to insure a water tight seal between the building and the window. In an equal leg window a bead of caulking material should also be applied.
- Any attachment screws or bolts should be sealed during the process of installation.
- After installation is complete, building paper and stucco wire (if a stucco application) should overlap the window nail-on flange.

CARE & MAINTENANCE

- Windows should be kept free of all dust, dirt, paint and plaster.
- The sill should be kept clean at all times. A vacuum cleaner with a crevice attachment is recommended.
- Window should only be cleaned with mild soap and water.
- **Caution:** Damage will occur to the frame finish, and to the sealed glass unit, if solvents, petroleum products, or caustic chemicals such as acetone or paint thinner are used to clean window frames. Damage caused by this type of abuse is not covered under warranty.

SERIES 6100 ASSEMBLY DRAWINGS

611 NAIL ON FRAME

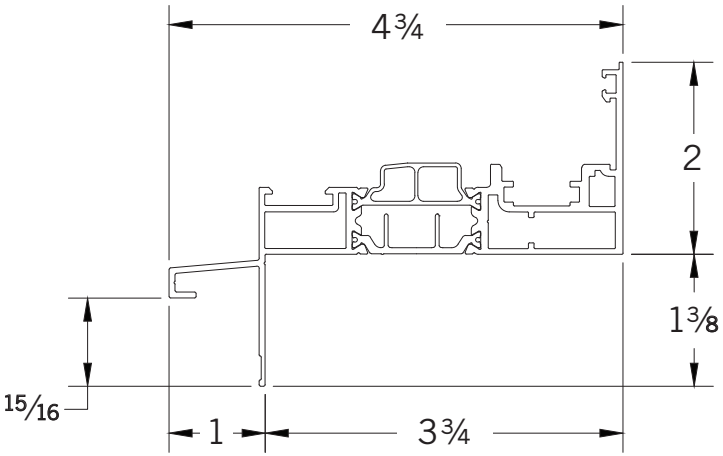

619 TDL

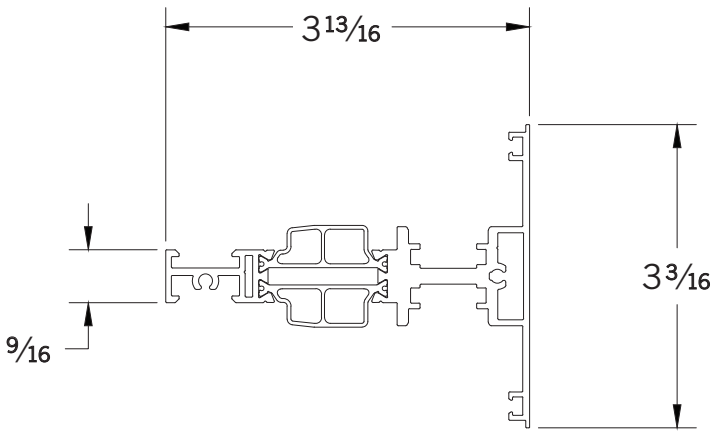

615 ENCORE VENT

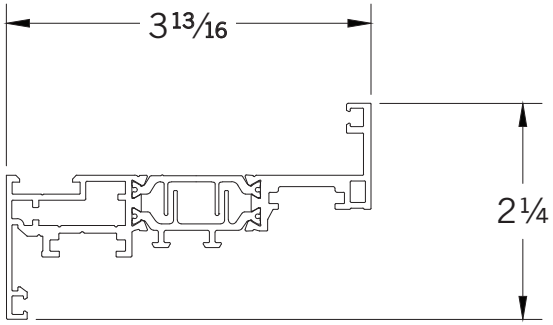

614 FAPIM VENT

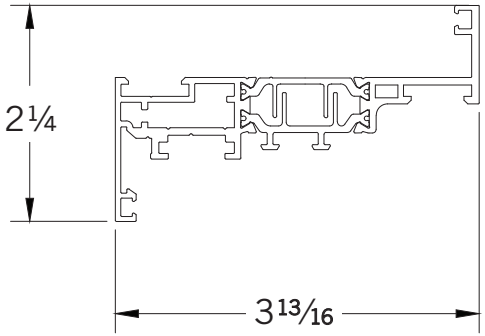

6182 SASH BEAD
FOR 1" OA GLASS

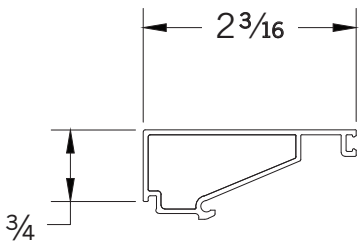

6183 FRAME BEAD
FOR 1" OA GLASS

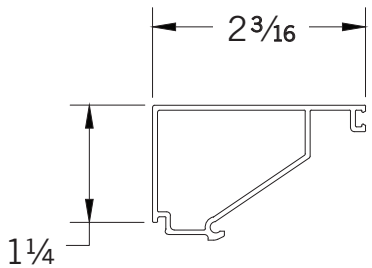

6180 SASH BEAD
FOR 1.25" OA GLASS

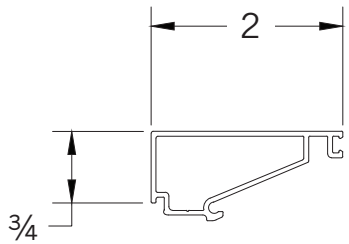

6181 FRAME BEAD
FOR 1.25" OA GLASS

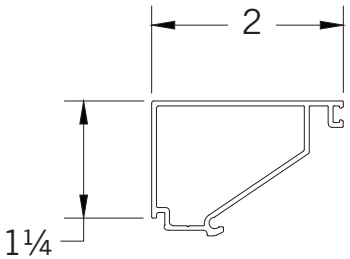

NAIL ON CASEMENT

FIXED / CASEMENT

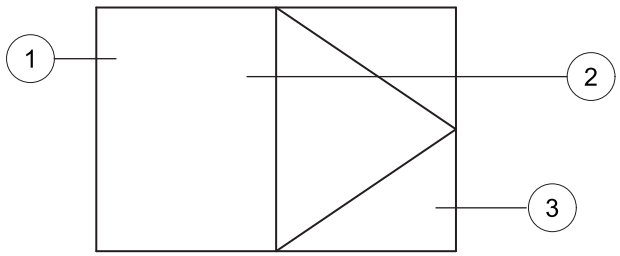

1

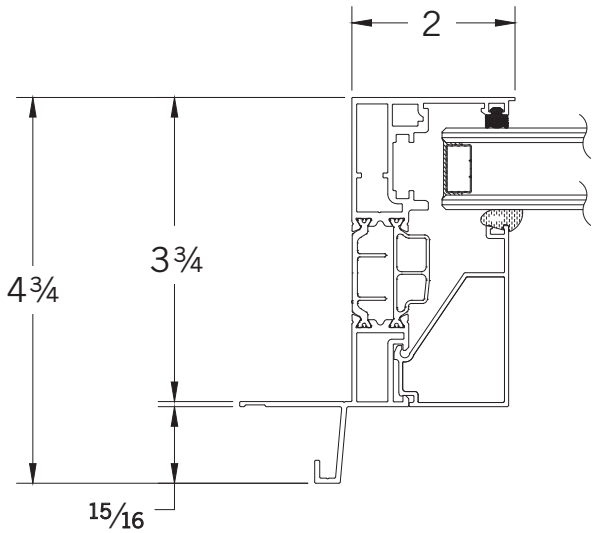

2

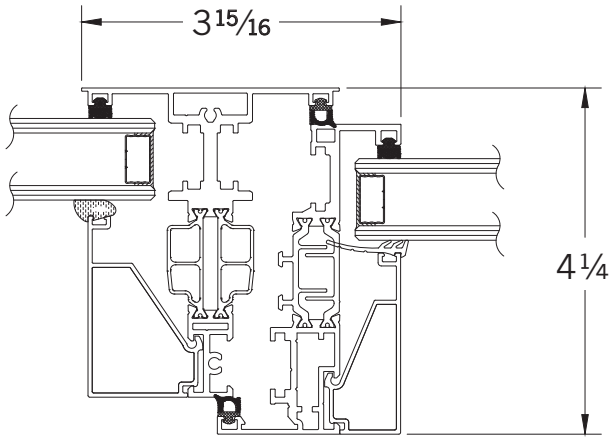

3

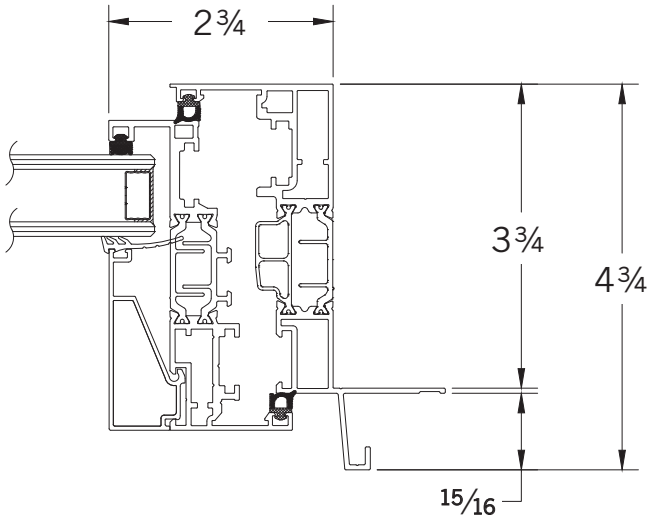

NAIL ON AWNING

AWNING / AWNING

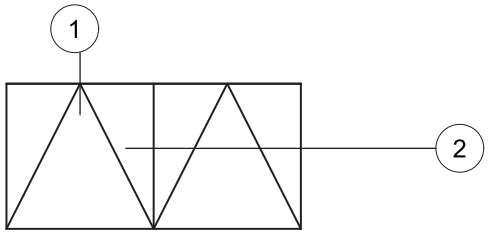

1

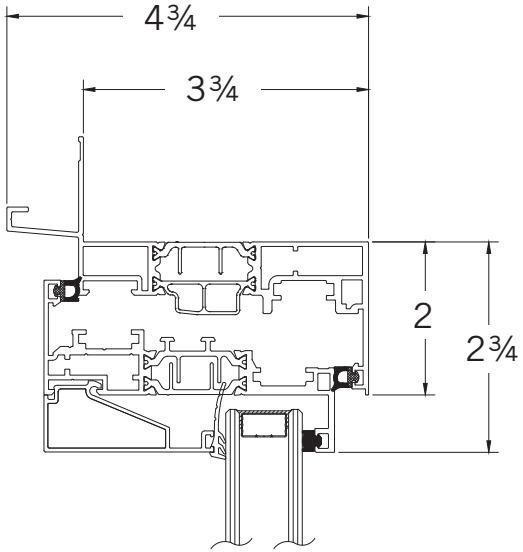

2

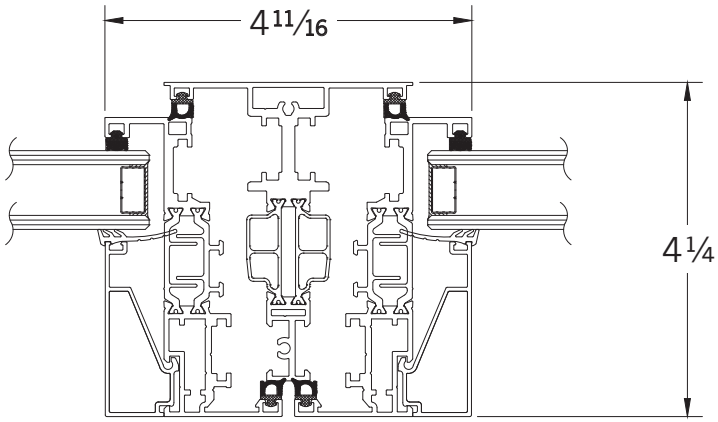

intertek
Total Quality. Assured.

ALL WEATHER ARCHITECTURAL ALUMINUM
TEST REPORT

SCOPE OF WORK
AAMA/WDMA/CSA 101/I.S.2/A440 TESTING ON SERIES 6100 CASEMENT WINDOW

REPORT NUMBER
M0351.01-301-44-R1

TEST DATE
04/22/21

ISSUE DATE 07/30/21
REVISION 1 DATE 09/01/21

PAGES
19

DOCUMENT CONTROL NUMBER
RT-R-AMER-Test-2804 (01/15/21)

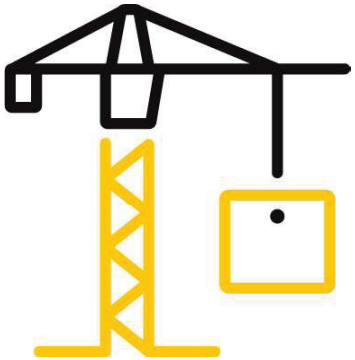

intertek
Total Quality. Assured.

2524 E. Jensen Ave
Fresno, California 93706

Telephone: 559-233-8705
Facsimile: 717-764-4129
www.intertek.com/building

TEST REPORT FOR ALL WEATHER ARCHITECTURAL ALUMINUM
Report No.: M0351.01-301-44-R1
Date: 09/01/21

REPORT ISSUED TO
ALL WEATHER ARCHITECTURAL ALUMINUM
777 Aldridge Road
Vacaville, CA 95688

SECTION 1
SCOPE

Architectural Testing, Inc. (an Intertek company) dba Intertek Building & Construction (B&C) was contracted by All Weather Architectural Aluminum to perform testing in accordance with AAMA/WDMA/CSA 101/I.S.2/A440 on their Series 6100 Casement Window. Results obtained are tested values and were secured by using the designated test method(s). Testing was conducted at the Intertek B&C test facility in Fresno, California. This report does not constitute certification of this product nor an opinion or endorsement by this laboratory.

This report does not constitute certification of this product nor an opinion or endorsement by this laboratory. Intertek B&C will service this report for the entire test record retention period. The test record retention period ends ten years after the test date. Test records, such as detailed drawings, datasheets, representative samples of test specimens, or other pertinent project documentation, will be retained for two years after the test date

Unless differently required, Intertek reports apply the "Simple Acceptance" rule, also called "Shared Risk approach," of ILAC-G8:09/2019, Guidelines on Decision Rules and Statements of Conformity.

For INTERTEK B&C:

COMPLETED BY:	Ricardo Cortez	**REVIEWED BY:**	Tyler Westerling, P.E.
TITLE:	Technician	**TITLE:**	Operations Manager
SIGNATURE:	Digitally Signed by: Ricardo Cortez	**SIGNATURE:**	Digitally Signed by: Tyler Westerling
DATE:	09/01/21	**DATE:**	09/01/21

RC:ms

intertek
Total Quality. Assured.

2524 E. Jensen Ave
Fresno, California 93706

Telephone: 559-233-8705
Facsimile: 717-764-4129
www.intertek.com/building

TEST REPORT FOR ALL WEATHER ARCHITECTURAL ALUMINUM
Report No.: M0351.01-301-44-R1
Date: 09/01/21

SECTION 2
SUMMARY OF TEST RESULTS

TITLE	RESULTS
AAMA/WDMA/CSA 101/I.S.2/A440-17	Class C – PG60 Size Tested: 800 x 1500 mm (32 x 59 in) Type C
Air Infiltration	0.2 L/s/m^2 (<0.03 cfm/ft^2)
Canadian Air Infiltration/Exfiltration Level	A3
Water Penetration Resistance Test Pressure	440 Pa (9.19 psf)
Design Pressure	±1920 Pa (±40.10 psf)

Reference must be made to Intertek B&C Report No. M0351.01-301-44 R1, dated 09/01/21 for complete test specimen description and detailed test results.

SECTION 3
TEST SPECIFICATION(S)/METHOD(S)
The specimens were evaluated in accordance with the following:

AAMA/WDMA/CSA 101/I.S.2/A440-17- *North American Fenestration Standard/Specification for Windows, Doors, and Skylights*

The following test methods were used during testing:

AAMA 205-15, *In-Plant Testing Guidelines for Manufacturers and Independent Laboratories*

ASTM E2068-00(2016), *Standard Test Method for Determination of Operating Force of Sliding Windows and Doors*

ASTM E283-04(2012), *Standard Test Method for Determining Rate of Air Leakage Through Exterior Windows, Curtain Walls, and Doors Under Specified Pressure Differences Across the Specimen*

ASTM E547-00(2016), *Standard Test Method for Water Penetration of Exterior Windows, Skylights, Doors, and Curtain Walls by Cyclic Static Air Pressure Difference*

ASTM E330/E330M-14, *Standard Test Method for Structural Performance of Exterior Windows, Doors, Skylights and Curtain Walls by Uniform Static Air Pressure Difference*

ASTM F588-17, *Standard Test Methods for Measuring the Forced Entry Resistance of Window Assemblies, Excluding Glazing Impact*

intertek
Total Quality. Assured.

2524 E. Jensen Ave
Fresno, California 93706

Telephone: 559-233-8705
Facsimile: 717-764-4129
www.intertek.com/building

TEST REPORT FOR ALL WEATHER ARCHITECTURAL ALUMINUM
Report No.: M0351.01-301-44-R1
Date: 09/01/21

SECTION 4
MATERIAL SOURCE/INSTALLATION
Test specimen was provided by the client. Representative samples of the test specimen(s) will be retained by Intertek B&C for a minimum of two years from the test completion date.

The specimen was installed into a Douglas-Fir wood buck. The rough opening allowed for a 1/4" shim space and the exterior perimeter of the specimen was sealed to the test buck.

LOCATION	ANCHOR DESCRIPTION	ANCHOR SPACING
(Nail Fin) Head, Sill	#8 x 1-5/8" flat head screw	6" from corners, 12" on center
(Nail Fin) Jambs	#8 x 1-5/8" flat head screw	6" from corners, Midspan

SECTION 5
LIST OF OFFICIAL OBSERVERS

NAME	COMPANY
Meng Vang	Intertek B&C
Tyler Westerling, P.E.	Intertek B&C

SECTION 6
TEST SPECIMEN DESCRIPTION
Product Type: Casement
Series/Model: Series 6100 Casement Window

Product Size(s):

OVERALL AREA:	WIDTH		HEIGHT	
1.20 m^2 (12.9 ft^2)	Millimeters	Inches	Millimeters	Inches
Overall size	800	31-1/2	1500	59-1/16
Vent	773	30-7/16	1475	58-1/16

Frame Construction:

MEMBER	MATERIAL	DESCRIPTION
Head, Jambs, Sill	Aluminum	Thermally broken
	JOINERY TYPE	DETAIL
All corners	Mitered	Corner Keys, Screwed, Sealed
Vent to Frame	Multi-Arm Hinge	Screwed, Sealed

intertek
Total Quality. Assured.

2524 E. Jensen Ave
Fresno, California 93706

Telephone: 559-233-8705
Facsimile: 717-764-4129
www.intertek.com/building

TEST REPORT FOR ALL WEATHER ARCHITECTURAL ALUMINUM
Report No.: M0351.01-301-44-R1
Date: 09/01/21

Vent Construction:

MEMBER	MATERIAL	DESCRIPTION
Rails, Stiles	Aluminum	Thermally broken
	JOINERY TYPE	**DETAIL**
All corners	Mitered	Corner Keys, Screwed, Sealed

Reinforcement: *No reinforcement was utilized.*

Weatherstripping:

DESCRIPTION	QUANTITY	LOCATION
Foam gasket	1 row	Vent – rails, stiles along thermal break
Hollow vinyl bulb gasket	1 row	Frame – head, jambs, sill facing vent
Hollow vinyl bulb gasket	1 row	Vent – rails, stiles facing frame

Glazing: *No conclusions of any kind regarding the adequacy or inadequacy of the glass in any glazed test specimen(s) can be made.*

GLASS TYPE	SPACER TYPE	LITE COMPOSITION	GLAZING METHOD
1" IG	Kodispace 4SG Thermoplastic	3/16" tempered, Interior / Exterior	Glass set on setting blocks Exterior glazed w/ aluminum snap-in bead.

LOCATION	QUANTITY	DAYLIGHT OPENING		GLASS BITE
		Millimeters	Inches	
Vent	1	773 x 1475	30-7/16 x 58-1/16	1/2"

Drainage:

METHOD	SIZE	QUANTITY	LOCATION
Notch	7/8" wide by 1/8" high	2	Frame sill @ glazing bead 2-1/2" from jamb
Notch	1/2" x 1/8"	2	Vent – underside of bottom rail

Hardware:

DESCRIPTION	QUANTITY	LOCATION
Roto-dial	1	Frame sill – 5-1/2" from hinge jamb
Multi arm hinge	2	Frame head/sill @ hinge jamb corner
Latch w/ lock arm	1	Frame lock jamb 10" from sill
Lock arm	1	Frame lock jamb full span

Screen Construction: *No screen was utilized.*

intertek
Total Quality. Assured.

2524 E. Jensen Ave
Fresno, California 93706

Telephone: 559-233-8705
Facsimile: 717-764-4129
www.intertek.com/building

TEST REPORT FOR ALL WEATHER ARCHITECTURAL ALUMINUM
Report No.: M0351.01-301-44-R1
Date: 09/01/21

SECTION 7
TEST RESULTS
The temperature during testing was 24°C (75.4°F). The results are tabulated as follows:

TITLE OF TEST	RESULTS	ALLOWED	NOTE
Operating Force, per ASTM E2068	Initiate Motion: 40 N (8.9 lbf) Maintain Motion: 22 N (5.0 lbf) Latches: 58 N (13.15 lbf)	60 N (13.49 lbf) max 30 N (6.74 lbf) max 100 N (22.48 lbf) max	
Air Leakage, Infiltration per ASTM E283 at 75 Pa (1.57 psf)	<0.1 L/s/m² (0.03 cfm/ft²)	0.5 L/s/m² (0.1 cfm/ft²) max.	1, 2
Air Leakage, Exfiltration per ASTM E283 at 75 Pa (1.57 psf)	<0.1 L/s/m² (0.02 cfm/ft²)	0.5 L/s/m² (0.1 cfm/ft²) max.	1, 2
Canadian Air Infiltration/Exfiltration Level	A3	N/A	
Water Penetration, per ASTM E547 at 440 Pa (9.19 psf)	Pass	No leakage	
Uniform Load Deflection, per ASTM E330 Deflections taken Between vent snubbers +2880 Pa (+60.15 psf) -2880 Pa (-60.15 psf)	 0.1 mm (0.01") 0.1 mm (0.01")	 1.7 mm (0.07") max. 1.7 mm (0.07") max.	3,4
Uniform Load Structural, per ASTM E330 Permanent set taken Between vent snubbers +4320 Pa (+90.23 psf) -4320 Pa (-90.23 psf)	 0.1 mm (0.01") 0.1 mm (0.01")	 1.2 mm (0.05") max. 1.2 mm (0.05") max.	3,4
Forced Entry Resistance, per ASTM F588, Type: B - Grade: 20	Pass	No entry	
Sash Vertical Deflection 200 N (45 lbf)	7.0 mm (0.28")	15.5 mm (0.61") max.	
Distributed Load 300 Pa (6.27 psf)	Pass	No Damage	

intertek
Total Quality. Assured.

2524 E. Jensen Ave
Fresno, California 93706

Telephone: 559-233-8705
Facsimile: 717-764-4129
www.intertek.com/building

TEST REPORT FOR ALL WEATHER ARCHITECTURAL ALUMINUM
Report No.: M0351.01-301-44-R1
Date: 09/01/21

Note 1: *The tested specimen meets (or exceeds) the performance levels specified in AAMA/WDMA/CSA 101/I.S.2/A440 for air leakage resistance.*

Note 2: Test Date 04/22/21 , Time: 10:00 AM

Note 3: *Loads were held for 10 seconds.*

Note 4: *Tape and film were used to seal against air leakage during structural testing. In our opinion, the tape and film did not influence the results of the test.*

SECTION 8
ALTERATIONS

No alterations were required.

intertek
Total Quality. Assured.

2524 E. Jensen Ave
Fresno, California 93706

Telephone: 559-233-8705
Facsimile: 717-764-4129
www.intertek.com/building

TEST REPORT FOR ALL WEATHER ARCHITECTURAL ALUMINUM
Report No.: M0351.01-301-44-R1
Date: 09/01/21

SECTION 9
LOCATION OF AIR SEAL

The air seal between the test specimen and the test wall is detailed below. The seal is made of foam weatherstripping and is attached to the edge of the test specimen buck. The test specimen buck is placed against the test wall and clamped in place, compressing the weatherstripping and creating a seal.

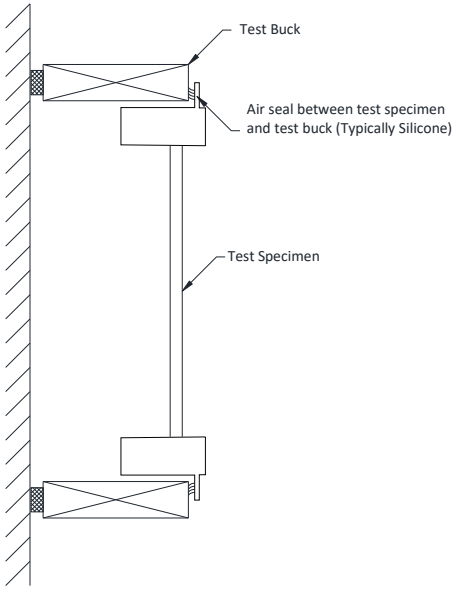

intertek
Total Quality. Assured.

2524 E. Jensen Ave
Fresno, California 93706

Telephone: 559-233-8705
Facsimile: 717-764-4129
www.intertek.com/building

TEST REPORT FOR ALL WEATHER ARCHITECTURAL ALUMINUM
Report No.: M0351.01-301-44-R1
Date: 09/01/21

SECTION 10
CONCLUSION

The specimens tested successfully met the performance requirements for the following ratings:

Class C – PG60 , Size Tested: 800 x 1500 mm (32 x 59 in) Type C

intertek
Total Quality. Assured.

2524 E. Jensen Ave
Fresno, California 93706

Telephone: 559-233-8705
Facsimile: 717-764-4129
www.intertek.com/building

TEST REPORT FOR ALL WEATHER ARCHITECTURAL ALUMINUM
Report No.: M0351.01-301-44-R1
Date: 09/01/21

SECTION 11
DRAWINGS

The test specimen drawings have been reviewed by Intertek B&C and are representative of the test specimen(s) reported herein. Test specimen construction was verified by Intertek B&C per the drawings included in this report. Any deviations are documented herein or on the drawings.

All drawings are on file with Intertek-ATI.

intertek
Total Quality. Assured.

2524 E. Jensen Ave
Fresno, California 93706

Telephone: 559-233-8705
Facsimile: 717-764-4129
www.intertek.com/building

TEST REPORT FOR ALL WEATHER ARCHITECTURAL ALUMINUM
Report No.: M0351.01-301-44-R1
Date: 09/01/21

SECTION 12
REVISION LOG

REVISION #	DATE	PAGES	REVISION
0	07/30/21	N/A	Original Report Issue
1	09/01/21	Page 5	IG spacer type changed

intertek
Total Quality. Assured.

ALL WEATHER ARCHITECTURAL ALUMINUM
TEST REPORT

SCOPE OF WORK
AAMA/WDMA/CSA 101/I.S.2/A440 TESTING ON SERIES 6100 AWNING PROJECTED WINDOW

REPORT NUMBER
M0352.01-301-44-R1

TEST DATES
03/17/21 - 03/23/21

ISSUE DATE 07/30/21
REVISION 1 DATE 09/01/21

PAGES
19

DOCUMENT CONTROL NUMBER
RT-R-AMER-Test-2804 (01/15/21)

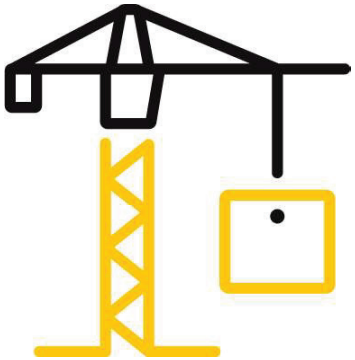

intertek
Total Quality. Assured.

2524 E. Jensen Ave
Fresno, California 93706

Telephone: 559-233-8705
Facsimile: 717-764-4129
www.intertek.com/building

TEST REPORT FOR ALL WEATHER ARCHITECTURAL ALUMINUM
Report No.: M0352.01-301-44-R1
Date: 09/01/21

REPORT ISSUED TO
ALL WEATHER ARCHITECTURAL ALUMINUM
777 Aldridge Road
Vacaville, CA 95688

SECTION 1
SCOPE

Architectural Testing, Inc. (an Intertek company) dba Intertek Building & Construction (B&C) was contracted by All Weather Architectural Aluminum to perform testing in accordance with AAMA/WDMA/CSA 101/I.S.2/A440 on their Series 6100 Awning Projected Window. Results obtained are tested values and were secured by using the designated test method(s). Testing was conducted at the Intertek B&C test facility in Fresno, California. This report does not constitute certification of this product nor an opinion or endorsement by this laboratory.

This report does not constitute certification of this product nor an opinion or endorsement by this laboratory. Intertek B&C will service this report for the entire test record retention period. The test record retention period ends ten years after the test date. Test records, such as detailed drawings, datasheets, representative samples of test specimens, or other pertinent project documentation, will be retained for two years after the test date

Unless differently required, Intertek reports apply the "Simple Acceptance" rule, also called "Shared Risk approach," of ILAC-G8:09/2019, Guidelines on Decision Rules and Statements of Conformity.

For INTERTEK B&C:

COMPLETED BY:	Ricardo Cortez	**REVIEWED BY:**	Tyler Westerling, P.E.
TITLE:	Technician	**TITLE:**	Operations Manager
SIGNATURE:	Digitally Signed by: Ricardo Cortez	**SIGNATURE:**	Digitally Signed by: Tyler Westerling
DATE:	09/01/21	**DATE:**	09/01/21

RC:ms

SERIES 6100 TESTING

intertek
Total Quality. Assured.

2524 E. Jensen Ave
Fresno, California 93706

Telephone: 559-233-8705
Facsimile: 717-764-4129
www.intertek.com/building

TEST REPORT FOR ALL WEATHER ARCHITECTURAL ALUMINUM
Report No.: M0352.01-301-44-R1
Date: 09/01/21

SECTION 2
SUMMARY OF TEST RESULTS

TITLE	RESULTS
AAMA/WDMA/CSA 101/I.S.2/A440-17	Class C – PG60, Size Tested: 1200 x 800 mm (47 x 32 in) Type AP
Air Infiltration	<0.1 L/s/m^2 (<0.01 cfm/ft^2)
Canadian Air Infiltration/Exfiltration Level	A3
Water Penetration Resistance Test Pressure	580 Pa (12.11 psf)
Design Pressure	±3360 Pa (±70.18 psf)

Reference must be made to Intertek B&C Report No. M0352.01-301-44 R1, dated 09/01/21 for complete test specimen description and detailed test results.

SECTION 3
TEST SPECIFICATION(S)/METHOD(S)
The specimens were evaluated in accordance with the following:

AAMA/WDMA/CSA 101/I.S.2/A440-17- *North American Fenestration Standard/Specification for Windows, Doors, and Skylights*

The following test methods were used during testing:

AAMA 205-15, *In-Plant Testing Guidelines for Manufacturers and Independent Laboratories*

ASTM E2068-00(2016), *Standard Test Method for Determination of Operating Force of Sliding Windows and Doors*

ASTM E283-04(2012), *Standard Test Method for Determining Rate of Air Leakage Through Exterior Windows, Curtain Walls, and Doors Under Specified Pressure Differences Across the Specimen*

ASTM E547-00(2016), *Standard Test Method for Water Penetration of Exterior Windows, Skylights, Doors, and Curtain Walls by Cyclic Static Air Pressure Difference*

ASTM E330/E330M-14, *Standard Test Method for Structural Performance of Exterior Windows, Doors, Skylights and Curtain Walls by Uniform Static Air Pressure Difference*

ASTM F588-17, *Standard Test Methods for Measuring the Forced Entry Resistance of Window Assemblies, Excluding Glazing Impact*

intertek
Total Quality. Assured.

2524 E. Jensen Ave
Fresno, California 93706

Telephone: 559-233-8705
Facsimile: 717-764-4129
www.intertek.com/building

TEST REPORT FOR ALL WEATHER ARCHITECTURAL ALUMINUM
Report No.: M0352.01-301-44-R1
Date: 09/01/21

SECTION 4
MATERIAL SOURCE/INSTALLATION

Test specimen was provided by the client. Representative samples of the test specimen(s) will be retained by Intertek B&C for a minimum of two years from the test completion date.

The specimen was installed into a Douglas-Fir wood buck. The rough opening allowed for a 1/4" shim space and the exterior perimeter of the specimen was sealed to the test buck.

LOCATION	ANCHOR DESCRIPTION	ANCHOR SPACING
(Nail Fin) Head, Sill	#8 x 1-5/8" flat head screw	6" from corners, 10" on center
(Nail Fin) Jambs	#8 x 1-5/8" flat head screw	6" from corners, midspan

SECTION 5
LIST OF OFFICIAL OBSERVERS

NAME	COMPANY
Meng Vang	Intertek B&C
Tyler Westerling, P.E.	Intertek B&C

SECTION 6
TEST SPECIMEN DESCRIPTION

Product Type: Awning
Series/Model: Series 6100 Awning Projected Window

Product Size(s):

OVERALL AREA:	WIDTH		HEIGHT	
0.96 m^2 (10.3 ft^2)	Millimeters	Inches	Millimeters	Inches
Overall size	1200	47-1/4	800	31-1/2
Vent	1175	46-1/4	775	30-1/2

Frame Construction:

MEMBER	MATERIAL	DESCRIPTION
Head, Jambs, Sill	Aluminum	Thermally broken
	JOINERY TYPE	DETAIL
All corners	Mitered	Corner Keys, Screwed, Sealed
Vent to Frame	Stay Arms	Screwed, Sealed

intertek
Total Quality. Assured.

2524 E. Jensen Ave
Fresno, California 93706

Telephone: 559-233-8705
Facsimile: 717-764-4129
www.intertek.com/building

TEST REPORT FOR ALL WEATHER ARCHITECTURAL ALUMINUM
Report No.: M0352.01-301-44-R1
Date: 09/01/21

Vent Construction:

MEMBER	MATERIAL	DESCRIPTION
Rails, Stiles	Aluminum	Thermally broken
	JOINERY TYPE	**DETAIL**
All corners	Mitered	Corner Keys, Screwed, Sealed

Reinforcement: *No reinforcement was utilized.*

Weatherstripping:

DESCRIPTION	QUANTITY	LOCATION
Foam gasket	1 row	Vent – rails, stiles along thermal break
Hollow vinyl bulb gasket	1 row	Frame – head, jambs, sill facing vent
Hollow vinyl bulb gasket	1 row	Vent – rails, stiles facing frame

Glazing: *No conclusions of any kind regarding the adequacy or inadequacy of the glass in any glazed test specimen(s) can be made.*

GLASS TYPE	SPACER TYPE	LITE COMPOSITION	GLAZING METHOD
1" IG	Kodispace 4SG Thermoplastic	3/16" tempered, Interior / Exterior	Glass set on setting blocks Exterior glazed w/ aluminum snap-in bead.

LOCATION	QUANTITY	DAYLIGHT OPENING		GLASS BITE
		Millimeters	Inches	
Vent	1	773 x 1475	30-7/16 x 58-1/16	1/2"

Drainage:

METHOD	SIZE	QUANTITY	LOCATION
Notch	7/8" wide by 1/8" high	2	Frame sill @ glazing bead 2-1/2" from jamb
Notch	1/2" x 1/8"	2	Vent – underside of bottom rail

Hardware:

DESCRIPTION	QUANTITY	LOCATION
Roto-dial	1	Frame Sill – Midspan
Hinge Arms	2	Frame Head @ Jambs
Latch	2	Frame Jambs – 10" from Sill

Screen Construction: *No screen was utilized.*

intertek
Total Quality. Assured.

2524 E. Jensen Ave
Fresno, California 93706

Telephone: 559-233-8705
Facsimile: 717-764-4129
www.intertek.com/building

TEST REPORT FOR ALL WEATHER ARCHITECTURAL ALUMINUM
Report No.: M0352.01-301-44-R1
Date: 09/01/21

SECTION 7
TEST RESULTS
The temperature during testing was 21°C (69°F). The results are tabulated as follows:

TITLE OF TEST	RESULTS	ALLOWED	NOTE
Operating Force, per ASTM E2068	Initiate Motion: 26 N (5.78 lbf) Maintain Motion: 18 N (3.95 lbf) Latches: 18 N (4 lbf)	60 N (13.49 lbf) max 30 N (6.74 lbf) max 100 N (22.48 lbf) max	
Air Leakage, Infiltration per ASTM E283 at 75 Pa (1.57 psf)	<0.1 L/s/m^2 (<0.01 cfm/ft^2)	0.5 L/s/m^2 (0.1 cfm/ft^2) max.	1, 2
Air Leakage, Exfiltration per ASTM E283 at 75 Pa (1.57 psf)	0.2 L/s/m^2 (0.04 cfm/ft^2)	0.5 L/s/m^2 (0.1 cfm/ft^2) max.	1, 2
Canadian Air Infiltration/Exfiltration Level	A2	N/A	
Water Penetration, per ASTM E547 at 580 Pa (12.11 psf)	Pass	No leakage	
Uniform Load Deflection, per ASTM E330 Deflections taken at Vent Top Rail +2880 Pa (+60.15 psf) -2880 Pa (-60.15 psf)	<0.1 mm (<0.01") 0.4 mm (0.02")	6.1 mm (0.24") max. 6.1 mm (0.24") max.	3,4
Uniform Load Structural, per ASTM E330 Permanent set taken at Vent Top Rail +4320 Pa (+90.23 psf) -4320 Pa (-90.23 psf)	<0.1 mm (<0.01") 0.1 mm (0.01")	4.3 mm (0.17") max. 4.3 mm (0.17") max.	3,4
Forced Entry Resistance, per ASTM F588, Type: B - Grade: 20	Pass	No entry	
Awning, Hopper, Projected Hardware Load Test 70 N (15.74 lbf)	4.0 mm (0.16")	Report Only	

intertek
Total Quality. Assured.

2524 E. Jensen Ave
Fresno, California 93706

Telephone: 559-233-8705
Facsimile: 717-764-4129
www.intertek.com/building

TEST REPORT FOR ALL WEATHER ARCHITECTURAL ALUMINUM
Report No.: M0352.01-301-44-R1
Date: 09/01/21

Note 1: *The tested specimen meets (or exceeds) the performance levels specified in AAMA/WDMA/CSA 101/I.S.2/A440 for air leakage resistance.*

Note 2: Test Date 03/18/21 , Time: 11:15 AM

Note 3: *Loads were held for 10 seconds.*

Note 4: *Tape and film were used to seal against air leakage during structural testing. In our opinion, the tape and film did not influence the results of the test.*

SECTION 8
ALTERATIONS

No alterations were required.

intertek
Total Quality. Assured.

2524 E. Jensen Ave
Fresno, California 93706

Telephone: 559-233-8705
Facsimile: 717-764-4129
www.intertek.com/building

TEST REPORT FOR ALL WEATHER ARCHITECTURAL ALUMINUM
Report No.: M0352.01-301-44-R1
Date: 09/01/21

SECTION 9
LOCATION OF AIR SEAL

The air seal between the test specimen and the test wall is detailed below. The seal is made of foam weatherstripping and is attached to the edge of the test specimen buck. The test specimen buck is placed against the test wall and clamped in place, compressing the weatherstripping and creating a seal.

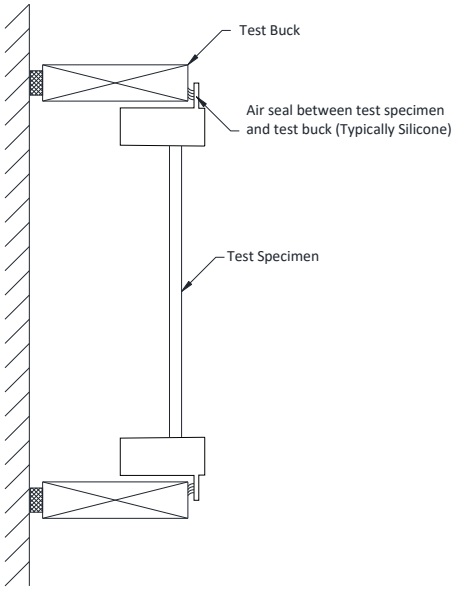

intertek
Total Quality. Assured.

2524 E. Jensen Ave
Fresno, California 93706

Telephone: 559-233-8705
Facsimile: 717-764-4129
www.intertek.com/building

TEST REPORT FOR ALL WEATHER ARCHITECTURAL ALUMINUM
Report No.: M0352.01-301-44-R1
Date: 09/01/21

SECTION 10
CONCLUSION

The specimens tested successfully met the performance requirements for the following ratings:

Class C – PG60, Size Tested: 1200 x 800 mm (47 x 32 in) Type AP

intertek
Total Quality. Assured.

2524 E. Jensen Ave
Fresno, California 93706

Telephone: 559-233-8705
Facsimile: 717-764-4129
www.intertek.com/building

TEST REPORT FOR ALL WEATHER ARCHITECTURAL ALUMINUM
Report No.: M0352.01-301-44-R1
Date: 09/01/21

SECTION 11
DRAWINGS

The test specimen drawings have been reviewed by Intertek B&C and are representative of the test specimen(s) reported herein. Test specimen construction was verified by Intertek B&C per the drawings included in this report. Any deviations are documented herein or on the drawings.

All drawings are on file with Intertek-ATI.

intertek
Total Quality. Assured.

2524 E. Jensen Ave
Fresno, California 93706

Telephone: 559-233-8705
Facsimile: 717-764-4129
www.intertek.com/building

TEST REPORT FOR ALL WEATHER ARCHITECTURAL ALUMINUM
Report No.: M0352.01-301-44-R1
Date: 09/01/21

SECTION 12
REVISION LOG

REVISION #	DATE	PAGES	REVISION
0	07/30/21	N/A	Original Report Issue
1	09/01/21	Page 5	IG Spacer Type Changed
		Page 6	Uniform Load Structural Allowable Corrected

intertek
Total Quality. Assured.

ALL WEATHER ARCHITECTURAL ALUMINUM
TEST REPORT

SCOPE OF WORK
AAMA/WDMA/CSA 101/I.S.2/A440 TESTING ON SERIES 6100 CASEMENT WINDOW WITH FAPIM HARDWARE

REPORT NUMBER
M0455.01-301-44 R1

TEST DATES
04/22/21 - 04/23/21

ISSUE DATE 07/30/21
REVISION 1 DATE 09/01/21

PAGES
19

DOCUMENT CONTROL NUMBER
RT-R-AMER-Test-2804 (01/15/21)

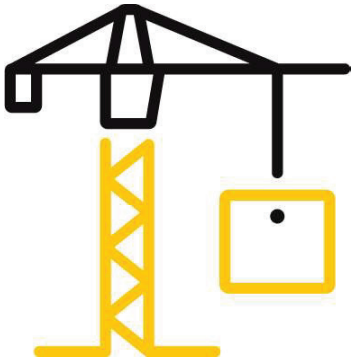

intertek
Total Quality. Assured.

2524 E. Jensen Ave
Fresno, California 93706

Telephone: 559-233-8705
Facsimile: 717-764-4129
www.intertek.com/building

TEST REPORT FOR ALL WEATHER ARCHITECTURAL ALUMINUM
Report No.: M0455.01-301-44 R1
Date: 09/01/21

REPORT ISSUED TO
ALL WEATHER ARCHITECTURAL ALUMINUM
777 Aldridge Road
Vacaville, CA 95688

SECTION 1
SCOPE

Architectural Testing, Inc. (an Intertek company) dba Intertek Building & Construction (B&C) was contracted by All Weather Architectural Aluminum to perform testing in accordance with AAMA/WDMA/CSA 101/I.S.2/A440 on their Series 6100 Casement Window with Fapim Hardware. Results obtained are tested values and were secured by using the designated test method(s). Testing was conducted at the Intertek B&C test facility in Fresno, California. This report does not constitute certification of this product nor an opinion or endorsement by this laboratory.

This report does not constitute certification of this product nor an opinion or endorsement by this laboratory. Intertek B&C will service this report for the entire test record retention period. The test record retention period ends ten years after the test date. Test records, such as detailed drawings, datasheets, representative samples of test specimens, or other pertinent project documentation, will be retained for two years after the test date

Unless differently required, Intertek reports apply the "Simple Acceptance" rule, also called "Shared Risk approach," of ILAC-G8:09/2019, Guidelines on Decision Rules and Statements of Conformity.

For INTERTEK B&C:

COMPLETED BY:	Ricardo Cortez	**REVIEWED BY:**	Tyler Westerling, P.E.
TITLE:	Technician	**TITLE:**	Operations Manager
SIGNATURE:	Digitally Signed by: Ricardo Cortez	**SIGNATURE:**	Digitally Signed by: Tyler Westerling
DATE:	09/01/21	**DATE:**	09/01/21

RC:ms

SERIES 6100 TESTING

intertek
Total Quality. Assured.

2524 E. Jensen Ave
Fresno, California 93706

Telephone: 559-233-8705
Facsimile: 717-764-4129
www.intertek.com/building

TEST REPORT FOR ALL WEATHER ARCHITECTURAL ALUMINUM
Report No.: M0455.01-301-44 R1
Date: 09/01/21

SECTION 2
SUMMARY OF TEST RESULTS

TITLE	RESULTS
AAMA/WDMA/CSA 101/I.S.2/A440-17	Class C - PG80 Size Tested: 810 x 1500 mm (32 x 59 in)
Air Infiltration	<0.1 L/s/m² (<0.01 cfm/ft²)
Canadian Air Infiltration/Exfiltration Level	A3
Water Penetration Resistance Test Pressure	580 Pa (12.11 psf)
Design Pressure	±3840 Pa (±80.20 psf)

Reference must be made to Intertek B&C Report No. M0455.01-301-44, dated 08/30/21 for complete test specimen description and detailed test results.

SECTION 3
TEST SPECIFICATION(S)/METHOD(S)

The specimens were evaluated in accordance with the following:

AAMA/WDMA/CSA 101/I.S.2/A440-17- *North American Fenestration Standard/Specification for Windows, Doors, and Skylights*

The following test methods were used during testing:

AAMA 205-15, *In-Plant Testing Guidelines for Manufacturers and Independent Laboratories*

ASTM E2068-00(2016), *Standard Test Method for Determination of Operating Force of Sliding Windows and Doors*

ASTM E283-04(2012), *Standard Test Method for Determining Rate of Air Leakage Through Exterior Windows, Curtain Walls, and Doors Under Specified Pressure Differences Across the Specimen*

ASTM E547-00(2016), *Standard Test Method for Water Penetration of Exterior Windows, Skylights, Doors, and Curtain Walls by Cyclic Static Air Pressure Difference*

ASTM E330/E330M-14, *Standard Test Method for Structural Performance of Exterior Windows, Doors, Skylights and Curtain Walls by Uniform Static Air Pressure Difference*

ASTM F588-17, *Standard Test Methods for Measuring the Forced Entry Resistance of Window Assemblies, Excluding Glazing Impact*

intertek
Total Quality. Assured.

2524 E. Jensen Ave
Fresno, California 93706

Telephone: 559-233-8705
Facsimile: 717-764-4129
www.intertek.com/building

TEST REPORT FOR ALL WEATHER ARCHITECTURAL ALUMINUM
Report No.: M0455.01-301-44 R1
Date: 09/01/21

SECTION 4
MATERIAL SOURCE/INSTALLATION

Test specimen was provided by the client. Representative samples of the test specimen(s) will be retained by Intertek B&C for a minimum of two years from the test completion date.

The specimen was installed into a Douglas-Fir wood buck. The rough opening allowed for a 1/4" shim space and the exterior perimeter of the specimen was sealed to the test buck.

LOCATION	ANCHOR DESCRIPTION	ANCHOR SPACING
(Nail Fin) Head, Sill	#8 x 1-5/8" flat head screw	6" from corners, 12" on center
(Nail Fin) Jambs	#8 x 1-5/8" flat head screw	6" from corners, Midspan

SECTION 5
LIST OF OFFICIAL OBSERVERS

NAME	COMPANY
Meng Vang	Intertek B&C
Tyler Westerling, P.E.	Intertek B&C

SECTION 6
TEST SPECIMEN DESCRIPTION

Product Type: Casement
Series/Model: Series 6100 Casement with Fapim Hardware

Product Size(s):

OVERALL AREA:	WIDTH		HEIGHT	
1.22 m² (13.1 ft²)	millimeters	inches	millimeters	inches
Overall size	810	31-7/8	1500	59-1/16
Vent	775	30-1/2	1475	58-1/16

Frame Construction:

MEMBER	MATERIAL	DESCRIPTION
Head, Jambs, Sill	Aluminum	Thermally broken
	JOINERY TYPE	DETAIL
All corners	Mitered	Corner Keys, Screwed, Sealed
Vent to Frame	Multi-Arm Hinge	Screwed, Sealed

intertek
Total Quality. Assured.

2524 E. Jensen Ave
Fresno, California 93706

Telephone: 559-233-8705
Facsimile: 717-764-4129
www.intertek.com/building

TEST REPORT FOR ALL WEATHER ARCHITECTURAL ALUMINUM
Report No.: M0455.01-301-44 R1
Date: 09/01/21

Vent Construction:

MEMBER	MATERIAL	DESCRIPTION
Rails, Stiles	Aluminum	Thermally broken
	JOINERY TYPE	**DETAIL**
All corners	Mitered	Corner Keys, Screwed, Sealed

Reinforcement: *No reinforcement was utilized.*

Weatherstripping:

DESCRIPTION	QUANTITY	LOCATION
Foam gasket	1 row	Vent – rails, stiles along thermal break
Hollow vinyl bulb gasket	1 row	Frame – head, jambs, sill facing vent
Hollow vinyl bulb gasket	1 row	Vent – rails, stiles facing frame

Glazing: *No conclusions of any kind regarding the adequacy or inadequacy of the glass in any glazed test specimen(s) can be made.*

GLASS TYPE	SPACER TYPE	LITE COMPOSITION	GLAZING METHOD
1" IG	Kodispace 4SG Thermoplastic	3/16" tempered, Interior / Exterior	Glass set on setting blocks Exterior glazed w/ aluminum snap-in bead.

LOCATION	QUANTITY	DAYLIGHT OPENING		GLASS BITE
		Millimeters	Inches	
Vent	1	773 x 1475	30-7/16 x 58-1/16	1/2"

Drainage:

METHOD	SIZE	QUANTITY	LOCATION
Notch	7/8" wide by 1/8" high	2	Frame sill @ glazing bead 2-1/2" from jamb
Notch	1/2" x 1/8"	2	Vent – underside of bottom rail

intertek
Total Quality. Assured.

2524 E. Jensen Ave
Fresno, California 93706

Telephone: 559-233-8705
Facsimile: 717-764-4129
www.intertek.com/building

TEST REPORT FOR ALL WEATHER ARCHITECTURAL ALUMINUM
Report No.: M0455.01-301-44 R1
Date: 09/01/21

Hardware:

DESCRIPTION	QUANTITY	LOCATION
Actuating Lever (with limit-arm, sliding lock arms and snubbers as a set)	1	Frame Lock Jamb – 21" from sill
- Limit-arm	1	Frame Lock Jamb – adjacent to lever
- Sliding lock arms	1 set	Vent – Lock stile, top / bottom rails
- Snubbers	1	Frame Head / Sill - midspan
Upper / Lower hinges	1 set	Frame Hinge Jamb at Head / Sill, adjacent to Vent hinge corners

Screen Construction: *No screen was utilized.*

SECTION 7
TEST RESULTS
The temperature during testing was 23°C (74°F). The results are tabulated as follows:

TITLE OF TEST	RESULTS	ALLOWED	NOTE
Operating Force, per ASTM E2068	Initiate Motion: 38 N (8.6 lbf) Maintain Motion: 37 N (8.5 lbf) Latches: 32 N (7.2 lbf)	155 N (34.85 lbf) max 100 N (22.48 lbf) max 100 N (22.48 lbf) max	
Air Leakage, Infiltration per ASTM E283 at 75 Pa (1.57 psf)	<0.1 L/s/m^2 (<0.01 cfm/ft^2)	0.5 L/s/m^2 (0.1 cfm/ft^2) max.	1, 2
Air Leakage, Exfiltration per ASTM E283 at 75 Pa (1.57 psf)	<0.1 L/s/m^2 (<0.01 cfm/ft^2)	0.5 L/s/m^2 (0.1 cfm/ft^2) max.	1, 2
Canadian Air Infiltration/Exfiltration Level	A3	N/A	
Water Penetration, per ASTM E547 at 580 Pa (12.11 psf)	Pass	No leakage	
Uniform Load Deflection, per ASTM E330 Deflections taken Between vent sliding lock arm +3840 Pa (+80.20 psf) -3840 Pa (-80.20 psf)	 0.9 mm (0.04") 0.9 mm (0.04")	 6.1 mm (0.24") max. 6.1 mm (0.24") max.	3, 4

intertek
Total Quality. Assured.

2524 E. Jensen Ave
Fresno, California 93706

Telephone: 559-233-8705
Facsimile: 717-764-4129
www.intertek.com/building

TEST REPORT FOR ALL WEATHER ARCHITECTURAL ALUMINUM
Report No.: M0455.01-301-44 R1
Date: 09/01/21

TITLE OF TEST	RESULTS	ALLOWED	NOTE
Uniform Load Structural, per ASTM E330 Permanent set taken Between vent sliding lock arm			
+5760 Pa (+120.30 psf)	<0.1 mm (<0.01")	1.2 mm (0.05") max.	
-5760 Pa (-120.30 psf)	0.1 mm (0.01")	1.2 mm (0.05") max.	3, 4
Forced Entry Resistance, per ASTM F588, Type: B - Grade: 20	Pass	No entry	
Sash Vertical Deflection 270 N (60 lbf)	5.3 mm (0.21")	15.5 mm (0.61") max.	
Distributed Load 300 Pa (6.27 psf)	Pass	No Damage	

Note 1: *The tested specimen meets (or exceeds) the performance levels specified in AAMA/WDMA/CSA 101/I.S.2/A440 for air leakage resistance.*

Note 2: Test Date 04/22/21, Time: 7:15 AM

Note 3: *Loads were held for 10 seconds.*

Note 4: *Tape and film were used to seal against air leakage during structural testing. In our opinion, the tape and film did not influence the results of the test.*

SECTION 8
ALTERATIONS

No alterations were required.

intertek
Total Quality. Assured.

2524 E. Jensen Ave
Fresno, California 93706

Telephone: 559-233-8705
Facsimile: 717-764-4129
www.intertek.com/building

TEST REPORT FOR ALL WEATHER ARCHITECTURAL ALUMINUM
Report No.: M0455.01-301-44 R1
Date: 09/01/21

SECTION 9
LOCATION OF AIR SEAL

The air seal between the test specimen and the test wall is detailed below. The seal is made of foam weatherstripping and is attached to the edge of the test specimen buck. The test specimen buck is placed against the test wall and clamped in place, compressing the weatherstripping and creating a seal.

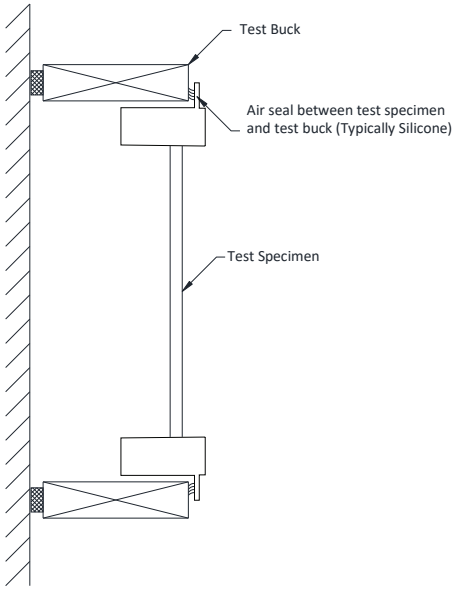

intertek
Total Quality. Assured.

2524 E. Jensen Ave
Fresno, California 93706

Telephone: 559-233-8705
Facsimile: 717-764-4129
www.intertek.com/building

TEST REPORT FOR ALL WEATHER ARCHITECTURAL ALUMINUM
Report No.: M0455.01-301-44 R1
Date: 09/01/21

SECTION 10
CONCLUSION

The specimens tested successfully met the performance requirements for the following ratings:

Class C – PG 80 Size Tested: 810 x 1500 mm (32 x 59 in) Type C

intertek
Total Quality. Assured.

2524 E. Jensen Ave
Fresno, California 93706

Telephone: 559-233-8705
Facsimile: 717-764-4129
www.intertek.com/building

TEST REPORT FOR ALL WEATHER ARCHITECTURAL ALUMINUM
Report No.: M0455.01-301-44 R1
Date: 09/01/21

SECTION 11
DRAWINGS

The test specimen drawings have been reviewed by Intertek B&C and are representative of the test specimen(s) reported herein. Test specimen construction was verified by Intertek B&C per the drawings included in this report. Any deviations are documented herein or on the drawings.

All drawings are on file with Intertek-ATI.

intertek
Total Quality. Assured.

2524 E. Jensen Ave
Fresno, California 93706

Telephone: 559-233-8705
Facsimile: 717-764-4129
www.intertek.com/building

TEST REPORT FOR ALL WEATHER ARCHITECTURAL ALUMINUM
Report No.: M0455.01-301-44 R1
Date: 09/01/21

SECTION 12
REVISION LOG

REVISION #	DATE	PAGES	REVISION
0	07/30/21	N/A	Original Report Issue
1	09/01/21	Page 3	Performance Grade to Match
		Page 5	IG Spacer Type Changed

intertek
Total Quality. Assured.

ALL WEATHER ARCHITECTURAL ALUMINUM
TEST REPORT

SCOPE OF WORK
AAMA/WDMA/CSA 101/I.S.2/A440 TESTING ON SERIES 6100 AWNING WINDOW WITH FAPIM HARDWARE

REPORT NUMBER
M0456.01-301-44-R1

TEST DATES
03/17/21 - 03/22/21

ISSUE DATE 07/30/21
REVISION 1 DATE 09/01/21

PAGES
19

DOCUMENT CONTROL NUMBER
RT-R-AMER-Test-2804 (01/15/21)

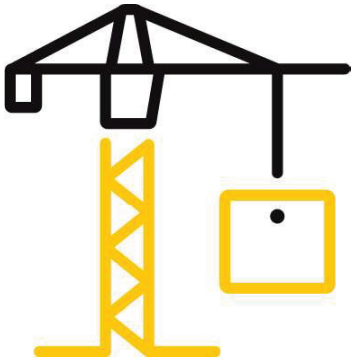

intertek
Total Quality. Assured.

2524 E. Jensen Ave
Fresno, California 93706

Telephone: 559-233-8705
Facsimile: 717-764-4129
www.intertek.com/building

TEST REPORT FOR ALL WEATHER ARCHITECTURAL ALUMINUM
Report No.: M0456.01-301-44-R1
Date: 09/01/21

REPORT ISSUED TO
ALL WEATHER ARCHITECTURAL ALUMINUM
777 Aldridge Road
Vacaville, CA 95688

SECTION 1
SCOPE

Architectural Testing, Inc. (an Intertek company) dba Intertek Building & Construction (B&C) was contracted by All Weather Architectural Aluminum to perform testing in accordance with AAMA/WDMA/CSA 101/I.S.2/A440 on their Series 6100 Awning Window with Fapim Hardware. Results obtained are tested values and were secured by using the designated test method(s). Testing was conducted at the Intertek B&C test facility in Fresno, California. This report does not constitute certification of this product nor an opinion or endorsement by this laboratory.

This report does not constitute certification of this product nor an opinion or endorsement by this laboratory. Intertek B&C will service this report for the entire test record retention period. The test record retention period ends ten years after the test date. Test records, such as detailed drawings, datasheets, representative samples of test specimens, or other pertinent project documentation, will be retained for two years after the test date

Unless differently required, Intertek reports apply the "Simple Acceptance" rule, also called "Shared Risk approach," of ILAC-G8:09/2019, Guidelines on Decision Rules and Statements of Conformity.

For INTERTEK B&C:

COMPLETED BY:	Ricardo Cortez	**REVIEWED BY:**	Tyler Westerling, P.E.
TITLE:	Technician	**TITLE:**	Operations Manager
SIGNATURE:	Digitally Signed by: Ricardo Cortez	**SIGNATURE:**	Digitally Signed by: Tyler Westerling
DATE:	09/01/21	**DATE:**	09/01/21

RC:ms

intertek
Total Quality. Assured.

2524 E. Jensen Ave
Fresno, California 93706

Telephone: 559-233-8705
Facsimile: 717-764-4129
www.intertek.com/building

TEST REPORT FOR ALL WEATHER ARCHITECTURAL ALUMINUM
Report No.: M0456.01-301-44-R1
Date: 09/01/21

SECTION 2
SUMMARY OF TEST RESULTS

TITLE	RESULTS
AAMA/WDMA/CSA 101/I.S.2/A440-17	Class C - PG30 Size Tested: 1200 x 800 mm (47 x 32 in) Type AP
Air Infiltration	0.1 L/s/m² (0.02 cfm/ft²)
Canadian Air Infiltration/Exfiltration Level	A3
Water Penetration Resistance Test Pressure	580 Pa (12.11 psf)
Design Pressure	±1440 Pa (±30.08 psf)

Reference must be made to Intertek B&C Report No. M0456.01-301-44, dated 08/31/21 for complete test specimen description and detailed test results.

SECTION 3
TEST SPECIFICATION(S)/METHOD(S)
The specimens were evaluated in accordance with the following:

AAMA/WDMA/CSA 101/I.S.2/A440-17- *North American Fenestration Standard/Specification for Windows, Doors, and Skylights*

The following test methods were used during testing:

AAMA 205-15, *In-Plant Testing Guidelines for Manufacturers and Independent Laboratories*

ASTM E2068-00(2016), *Standard Test Method for Determination of Operating Force of Sliding Windows and Doors*

ASTM E283-04(2012), *Standard Test Method for Determining Rate of Air Leakage Through Exterior Windows, Curtain Walls, and Doors Under Specified Pressure Differences Across the Specimen*

ASTM E547-00(2016), *Standard Test Method for Water Penetration of Exterior Windows, Skylights, Doors, and Curtain Walls by Cyclic Static Air Pressure Difference*

ASTM E330/E330M-14, *Standard Test Method for Structural Performance of Exterior Windows, Doors, Skylights and Curtain Walls by Uniform Static Air Pressure Difference*

ASTM F588-17, *Standard Test Methods for Measuring the Forced Entry Resistance of Window Assemblies, Excluding Glazing Impact*

intertek
Total Quality. Assured.

2524 E. Jensen Ave
Fresno, California 93706

Telephone: 559-233-8705
Facsimile: 717-764-4129
www.intertek.com/building

TEST REPORT FOR ALL WEATHER ARCHITECTURAL ALUMINUM
Report No.: M0456.01-301-44-R1
Date: 09/01/21

SECTION 4
MATERIAL SOURCE/INSTALLATION

Test specimen was provided by the client. Representative samples of the test specimen(s) will be retained by Intertek B&C for a minimum of two years from the test completion date.

The specimen was installed into a Douglas-Fir wood buck. The rough opening allowed for a 1/4" shim space and the exterior perimeter of the specimen was sealed to the test buck.

LOCATION	ANCHOR DESCRIPTION	ANCHOR SPACING
(Nail Fin) Head, Sill	#8 x 1-5/8" flat head screw	6" from corners, 10" on center
(Nail Fin) Jambs	#8 x 1-5/8" flat head screw	6" from corners, midspan

SECTION 5
LIST OF OFFICIAL OBSERVERS

NAME	COMPANY
Meng Vang	Intertek B&C
Tyler Westerling, P.E.	Intertek B&C

SECTION 6
TEST SPECIMEN DESCRIPTION

Product Type: Awning
Series/Model: Series 6100 Awning Project Window with Fapim Hardware

Product Size(s):

OVERALL AREA:	WIDTH		HEIGHT	
0.96 m² (10.3 ft²)	Millimeters	Inches	Millimeters	Inches
Overall size	1200	47-1/4	800	31-1/2
Vent	1175	46-1/4	775	30-1/2

Frame Construction:

MEMBER	MATERIAL	DESCRIPTION
Heads, Jambs, Sill	Aluminum	Thermally broken
	JOINERY TYPE	DETAIL
All corners	Mitered	Corner Keys, Screwed, Sealed
Vent to Frame	Stay Arms	Screwed, Sealed

intertek
Total Quality. Assured.

2524 E. Jensen Ave
Fresno, California 93706

Telephone: 559-233-8705
Facsimile: 717-764-4129
www.intertek.com/building

TEST REPORT FOR ALL WEATHER ARCHITECTURAL ALUMINUM
Report No.: M0456.01-301-44-R1
Date: 09/01/21

Vent Construction:

MEMBER	MATERIAL	DESCRIPTION
Rails, Stiles	Aluminum	Thermally broken
	JOINERY TYPE	**DETAIL**
All corners	Mitered	Corner Keys, Screwed, Sealed

Reinforcement: *No reinforcement was utilized.*

Weatherstripping:

DESCRIPTION	QUANTITY	LOCATION
Foam gasket	1 row	Vent – rails, stiles along thermal break
Hollow vinyl bulb gasket	1 row	Frame – head, jambs, sill facing vent
Hollow vinyl bulb gasket	1 row	Vent – rails, stiles facing frame

Glazing: *No conclusions of any kind regarding the adequacy or inadequacy of the glass in any glazed test specimen(s) can be made.*

GLASS TYPE	SPACER TYPE	LITE COMPOSITION	GLAZING METHOD	
1" IG	Kodispace 4SG Thermoplastic	3/16" tempered, Interior / Exterior	Glass set on setting blocks Exterior glazed w/ aluminum snap-in bead.	
LOCATION	**QUANTITY**	**DAYLIGHT OPENING**		**GLASS BITE**
		Millimeters	**Inches**	
Vent	1	773 x 1475	30-7/16 x 58-1/16	1/2"

Drainage:

METHOD	SIZE	QUANTITY	LOCATION
Notch	7/8" wide by 1/8" high	2	Frame sill @ glazing bead 2-1/2" from jamb
Notch	1/2" x 1/8"	2	Vent – underside of bottom rail

intertek
Total Quality. Assured.

2524 E. Jensen Ave
Fresno, California 93706

Telephone: 559-233-8705
Facsimile: 717-764-4129
www.intertek.com/building

TEST REPORT FOR ALL WEATHER ARCHITECTURAL ALUMINUM
Report No.: M0456.01-301-44-R1
Date: 09/01/21

Hardware:

DESCRIPTION	QUANTITY	LOCATION
Actuating Lever (with limit-arm, sliding lock arms and snubbers as a set)	1	Frame Sill – Midspan
- Limit-arm	1	Frame Sill – adjacent to lever
- Sliding lock arms	1 set	Vent – Stiles, Bottom rails
- Snubbers	1	Frame Jambs - midspan
Left / Right Vent hinges	1 set	Frame Top rail both ends, adjacent to Vent hinge corners

Screen Construction:

FRAME MATERIAL	CORNER CONSTRUCTION	MESH TYPE	MESH ATTACHMENT METHOD
Aluminum	Plastic corner keys	Vinyl	Vinyl ridged spline

SECTION 7
TEST RESULTS
The temperature during testing was 20°C (68°F). The results are tabulated as follows:

TITLE OF TEST	RESULTS	ALLOWED	NOTE
Operating Force, per ASTM E2068	Initiate Motion: 26 N (5.78 lbf) Maintain Motion: 18 N (3.95 lbf) Latches: 19 N (4.25 lbf)	155 N (34.85 lbf) max 100 N (22.48 lbf) max 100 N (22.48 lbf) max	
Air Leakage, Infiltration per ASTM E283 at 75 Pa (1.57 psf)	0.1 L/s/m² (0.02 cfm/ft²)	0.5 L/s/m² (0.1 cfm/ft²) max.	1, 2
Air Leakage, Exfiltration per ASTM E283 at 75 Pa (1.57 psf)	0.1 L/s/m² (0.02 cfm/ft²)	0.5 L/s/m² (0.1 cfm/ft²) max.	1, 2
Canadian Air Infiltration/Exfiltration Level	A3	N/A	
Water Penetration, per ASTM E547 at 580 Pa (12.11 psf)	Pass	No leakage	
Uniform Load Deflection, per ASTM E330 Deflections taken Vent top rail between hinges +1440 Pa (+30.08 psf) -1440 Pa (-30.08 psf)	0.1 mm (0.01") 0.5 mm (0.02")	6.1 mm (0.24") max. 6.1 mm (0.24") max.	3,4

intertek
Total Quality. Assured.

2524 E. Jensen Ave
Fresno, California 93706

Telephone: 559-233-8705
Facsimile: 717-764-4129
www.intertek.com/building

TEST REPORT FOR ALL WEATHER ARCHITECTURAL ALUMINUM
Report No.: M0456.01-301-44-R1
Date: 09/01/21

TITLE OF TEST	RESULTS	ALLOWED	NOTE
Uniform Load Structural, per ASTM E330 Permanent set taken Vent top rail between hinges			
+2160 Pa (+45.11 psf)	<0.1 mm (<0.01")	1.2 mm (0.05") max.	
-2160 Pa (-45.11 psf)	<0.1 mm (<0.01")	1.2 mm (0.05") max.	3,4
Forced Entry Resistance, per ASTM F588, Type: B - Grade: 20	Pass	No entry	
Sash Vertical Deflection 270 N (60 lbf)	5.1 mm (0.20")	15.5 mm (0.61") max.	
Distributed Load 300 Pa (6.27 psf)	Pass	No Damage	

Note 1: *The tested specimen meets (or exceeds) the performance levels specified in AAMA/WDMA/CSA 101/I.S.2/A440 for air leakage resistance.*

Note 2: Test Date 03/17/21 , Time: 1:15 PM

Note 3: *Loads were held for 10 seconds.*

Note 4: *Tape and film were used to seal against air leakage during structural testing. In our opinion, the tape and film did not influence the results of the test.*

SECTION 8
ALTERATIONS

No alterations were required.

intertek
Total Quality. Assured.

2524 E. Jensen Ave
Fresno, California 93706

Telephone: 559-233-8705
Facsimile: 717-764-4129
www.intertek.com/building

TEST REPORT FOR ALL WEATHER ARCHITECTURAL ALUMINUM
Report No.: M0456.01-301-44-R1
Date: 09/01/21

SECTION 9
LOCATION OF AIR SEAL

The air seal between the test specimen and the test wall is detailed below. The seal is made of foam weatherstripping and is attached to the edge of the test specimen buck. The test specimen buck is placed against the test wall and clamped in place, compressing the weatherstripping and creating a seal.

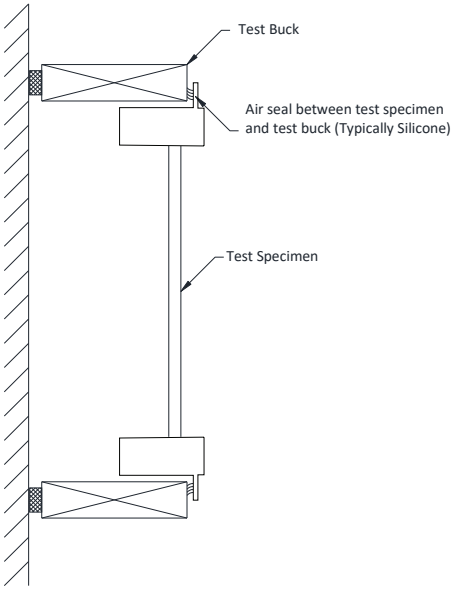

intertek
Total Quality. Assured.

2524 E. Jensen Ave
Fresno, California 93706

Telephone: 559-233-8705
Facsimile: 717-764-4129
www.intertek.com/building

TEST REPORT FOR ALL WEATHER ARCHITECTURAL ALUMINUM
Report No.: M0456.01-301-44-R1
Date: 09/01/21

SECTION 10
CONCLUSION

The specimens tested successfully met the performance requirements for the following ratings:

Class C – PG30, Size Tested: 1200 x 800 mm (47 x 32 in) Type AP

intertek
Total Quality. Assured.

2524 E. Jensen Ave
Fresno, California 93706

Telephone: 559-233-8705
Facsimile: 717-764-4129
www.intertek.com/building

TEST REPORT FOR ALL WEATHER ARCHITECTURAL ALUMINUM
Report No.: M0456.01-301-44-R1
Date: 09/01/21

SECTION 11
DRAWINGS

The test specimen drawings have been reviewed by Intertek B&C and are representative of the test specimen(s) reported herein. Test specimen construction was verified by Intertek B&C per the drawings included in this report. Any deviations are documented herein or on the drawings.

All drawings are on file with Intertek-ATI.

intertek
Total Quality. Assured.

2524 E. Jensen Ave
Fresno, California 93706

Telephone: 559-233-8705
Facsimile: 717-764-4129
www.intertek.com/building

TEST REPORT FOR ALL WEATHER ARCHITECTURAL ALUMINUM
Report No.: M0456.01-301-44-R1
Date: 09/01/21

SECTION 12
REVISION LOG

REVISION #	DATE	PAGES	REVISION
0	07/30/21	N/A	Original Report Issue.
1	09/01/21	Page 5	IG Spacer Type Changed.

intertek
Total Quality. Assured.

ALL WEATHER ARCHITECTURAL ALUMINUM
TEST REPORT

SCOPE OF WORK
AAMA/WDMA/CSA 101/I.S.2/A440 TESTING ON SERIES 6100 FIXED WINDOW

REPORT NUMBER
M0355.01-301-44-R1

TEST DATES
03/22/21 - 03/23/21

ISSUE DATE 08/06/21
REVISION 1 DATE 09/01/21

PAGES
16

DOCUMENT CONTROL NUMBER
RT-R-AMER-Test-2804 (01/15/21)

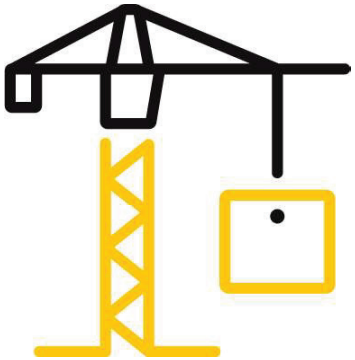

intertek
Total Quality. Assured.

2524 E. Jensen Ave
Fresno, California 93706

Telephone: 559-233-8705
Facsimile: 717-764-4129
www.intertek.com/building

TEST REPORT FOR ALL WEATHER ARCHITECTURAL ALUMINUM
Report No.: M0355.01-301-44-R1
Date: 09/01/21

REPORT ISSUED TO
ALL WEATHER ARCHITECTURAL ALUMINUM
777 Aldridge Road
Vacaville, CA 95688

SECTION 1
SCOPE

Architectural Testing, Inc. (an Intertek company) dba Intertek Building & Construction (B&C) was contracted by All Weather Architectural Aluminum to perform testing in accordance with AAMA/WDMA/CSA 101/I.S.2/A440 on their Series 6100 Fixed Window. Results obtained are tested values and were secured by using the designated test method(s). Testing was conducted at the Intertek B&C test facility in Fresno, California. This report does not constitute certification of this product nor an opinion or endorsement by this laboratory.

This report does not constitute certification of this product nor an opinion or endorsement by this laboratory. Intertek B&C will service this report for the entire test record retention period. The test record retention period ends ten years after the test date. Test records, such as detailed drawings, datasheets, representative samples of test specimens, or other pertinent project documentation, will be retained for two years after the test date

Unless differently required, Intertek reports apply the "Simple Acceptance" rule, also called "Shared Risk approach," of ILAC-G8:09/2019, Guidelines on Decision Rules and Statements of Conformity.

For INTERTEK B&C:

COMPLETED BY:	Ricardo Cortez	**REVIEWED BY:**	Tyler Westerling, P.E.
TITLE:	Technician	**TITLE:**	Operations Manager
SIGNATURE:	Digitally Signed by: Ricardo Cortez	**SIGNATURE:**	Digitally Signed by: Tyler Westerling
DATE:	09/01/21	**DATE:**	09/01/21

RC:ms

intertek
Total Quality. Assured.

2524 E. Jensen Ave
Fresno, California 93706

Telephone: 559-233-8705
Facsimile: 717-764-4129
www.intertek.com/building

TEST REPORT FOR ALL WEATHER ARCHITECTURAL ALUMINUM
Report No.: M0355.01-301-44-R1
Date: 09/01/21

SECTION 2
SUMMARY OF TEST RESULTS

TITLE	RESULTS
AAMA/WDMA/CSA 101/I.S.2/A440-17	Class LC – PG 70 - Size Tested: 1524 x 1524 mm (60 x 60 in) Type: FW
Air Infiltration	0.9 L/s/m^2 (0.17 cfm/ft^2)
Canadian Air Infiltration/Exfiltration Level	A2
Water Penetration Resistance Test Pressure	580 Pa (12.11 psf)
Design Pressure	±3360 Pa (±70.18 psf)

Reference must be made to Intertek B&C Report No. M0355.01-301-44 R1, dated 09/01/21 for complete test specimen description and detailed test results.

SECTION 3
TEST SPECIFICATION(S)/METHOD(S)

The specimens were evaluated in accordance with the following:

AAMA/WDMA/CSA 101/I.S.2/A440-17- *North American Fenestration Standard/Specification for Windows, Doors, and Skylights*

The following test methods were used during testing:

AAMA 205-15, *In-Plant Testing Guidelines for Manufacturers and Independent Laboratories*

ASTM E283-04(2012), *Standard Test Method for Determining Rate of Air Leakage Through Exterior Windows, Curtain Walls, and Doors Under Specified Pressure Differences Across the Specimen*

ASTM E547-00(2016), *Standard Test Method for Water Penetration of Exterior Windows, Skylights, Doors, and Curtain Walls by Cyclic Static Air Pressure Difference*

ASTM E330/E330M-14, *Standard Test Method for Structural Performance of Exterior Windows, Doors, Skylights and Curtain Walls by Uniform Static Air Pressure Difference*

ASTM F588-17, *Standard Test Methods for Measuring the Forced Entry Resistance of Window Assemblies, Excluding Glazing Impact*

intertek
Total Quality. Assured.

2524 E. Jensen Ave
Fresno, California 93706

Telephone: 559-233-8705
Facsimile: 717-764-4129
www.intertek.com/building

TEST REPORT FOR ALL WEATHER ARCHITECTURAL ALUMINUM
Report No.: M0355.01-301-44-R1
Date: 09/01/21

SECTION 4
MATERIAL SOURCE/INSTALLATION

Test specimen was provided by the client. Representative samples of the test specimen(s) will be retained by Intertek B&C for a minimum of two years from the test completion date.

The specimen was installed into a Douglas-Fir wood buck. The rough opening allowed for a 1/4" shim space and the exterior perimeter of the specimen was sealed to the test buck.

LOCATION	ANCHOR DESCRIPTION	ANCHOR SPACING
(Nail Fin) Head, Jambs, Sill	#8 x 1-5/8" flat head screw	6" from corners, 10" on center

SECTION 5
LIST OF OFFICIAL OBSERVERS

NAME	COMPANY
Meng Vang	Intertek B&C
Tyler Westerling, P.E.	Intertek B&C

SECTION 6
TEST SPECIMEN DESCRIPTION

Product Type: Fixed Window
Series/Model: Series 6100 Fixed Window

Product Size(s):

OVERALL AREA:	WIDTH		HEIGHT	
2.32 m^2 (25.0 ft^2)	Millimeters	Inches	Millimeters	Inches
Overall size	1524	60	1524	60

Frame Construction:

MEMBER	MATERIAL	DESCRIPTION
Head, Jambs, Sill	Aluminum	Thermally broken
	JOINERY TYPE	DETAIL
All corners	Mitered	Corner Keys, Screwed, Sealed

Reinforcement: *No reinforcement was utilized.*

Weatherstripping: *No weatherstripping was utilized.*

intertek
Total Quality. Assured.

2524 E. Jensen Ave
Fresno, California 93706

Telephone: 559-233-8705
Facsimile: 717-764-4129
www.intertek.com/building

TEST REPORT FOR ALL WEATHER ARCHITECTURAL ALUMINUM
Report No.: M0355.01-301-44-R1
Date: 09/01/21

Glazing: *No conclusions of any kind regarding the adequacy or inadequacy of the glass in any glazed test specimen(s) can be made.*

GLASS TYPE	SPACER TYPE	LITE COMPOSITION	GLAZING METHOD
1" IG	Kodispace 4SG Thermoplastic	3/16" tempered, Interior / Exterior	Glass set on setting blocks Exterior glazed w/ aluminum snap-in bead.

LOCATION	QUANTITY	DAYLIGHT OPENING		GLASS BITE
		Millimeters	Inches	
Frame	1	1387 x 1387	54-5/8 x 54-5/8	1/2"

Drainage:

METHOD	SIZE	QUANTITY	LOCATION
Notch	7/8" wide by 1/8" high	2	Sill face - 2-1/2" from jamb

Hardware: *No hardware was utilized.*

Screen Construction: *No screen was utilized.*

intertek
Total Quality. Assured.

2524 E. Jensen Ave
Fresno, California 93706

Telephone: 559-233-8705
Facsimile: 717-764-4129
www.intertek.com/building

TEST REPORT FOR ALL WEATHER ARCHITECTURAL ALUMINUM
Report No.: M0355.01-301-44-R1
Date: 09/01/21

SECTION 7
TEST RESULTS
The temperature during testing was 23°C (73.9°F). The results are tabulated as follows:

TITLE OF TEST	RESULTS	ALLOWED	NOTE
Air Leakage, Infiltration per ASTM E283 at 75 Pa (1.57 psf)	0.9 L/s/m^2 (0.17 cfm/ft^2)	1.5 L/s/m^2 (0.3 cfm/ft^2) max.	1, 2
Air Leakage, Exfiltration per ASTM E283 at 75 Pa (1.57 psf)	1.0 L/s/m^2 (0.19 cfm/ft^2)	1.5 L/s/m^2 (0.3 cfm/ft^2) max.	1, 2
Canadian Air Infiltration/Exfiltration Level	A2	N/A	
Water Penetration, per ASTM E547 at 580 Pa (12.11 psf)	Pass	No leakage	
Uniform Load Deflection, per ASTM E330 Deflections taken at Between Anchors @ Jamb			
+3360 Pa (+70.18 psf)	<0.1 mm (<0.01")	Report only	
-3360 Pa (-70.18 psf)	0.3 mm (0.01")		3,4,5
Uniform Load Structural, per ASTM E330 Permanent set taken at Between Anchors @ Jamb			
+5040 Pa (+105.26 psf)	0.1 mm (0.01")	1.0 mm (0.04") max.	
-5040 Pa (-105.26 psf)	<0.1 mm (<0.01")	1.0 mm (0.04") max.	4,5
Forced Entry Resistance, per ASTM F588, Type: D - Grade: 10	Pass	No entry	

Note 1: *The tested specimen meets (or exceeds) the performance levels specified in AAMA/WDMA/CSA 101/I.S.2/A440 for air leakage resistance.*
Note 2: Test Date 03/22/21 , Time: 2:22 PM
Note 3: *The deflections reported are not limited by AAMA/WDMA/CSA 101/I.S.2/A440 for this product designation. The deflection data is recorded in this report for special code compliance and information only.*
Note 4: *Loads were held for 10 seconds.*
Note 5: *Tape and film were used to seal against air leakage during structural testing. In our opinion, the tape and film did not influence the results of the test.*

intertek
Total Quality. Assured.

2524 E. Jensen Ave
Fresno, California 93706

Telephone: 559-233-8705
Facsimile: 717-764-4129
www.intertek.com/building

TEST REPORT FOR ALL WEATHER ARCHITECTURAL ALUMINUM
Report No.: M0355.01-301-44-R1
Date: 09/01/21

SECTION 8
ALTERATIONS

No alterations were required.

SECTION 9
LOCATION OF AIR SEAL

The air seal between the test specimen and the test wall is detailed below. The seal is made of foam weatherstripping and is attached to the edge of the test specimen buck. The test specimen buck is placed against the test wall and clamped in place, compressing the weatherstripping and creating a seal.

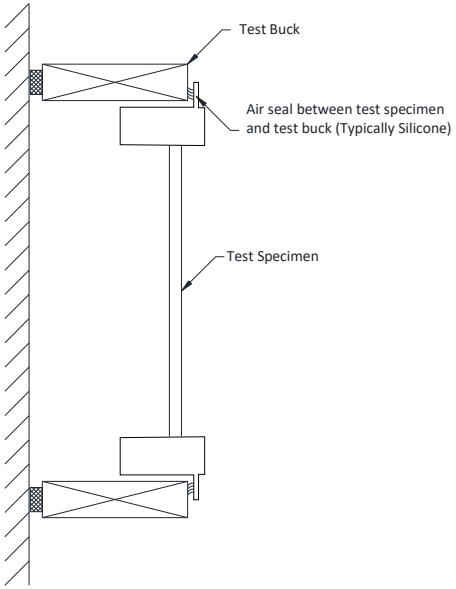

intertek
Total Quality. Assured.

2524 E. Jensen Ave
Fresno, California 93706

Telephone: 559-233-8705
Facsimile: 717-764-4129
www.intertek.com/building

TEST REPORT FOR ALL WEATHER ARCHITECTURAL ALUMINUM
Report No.: M0355.01-301-44-R1
Date: 09/01/21

SECTION 10
CONCLUSION

The specimens tested successfully met the performance requirements for the following ratings:

Class LC – PG 70 - Size Tested: 1524 x 1524 mm (60 x 60 in) Type: FW

intertek
Total Quality. Assured.

2524 E. Jensen Ave
Fresno, California 93706

Telephone: 559-233-8705
Facsimile: 717-764-4129
www.intertek.com/building

TEST REPORT FOR ALL WEATHER ARCHITECTURAL ALUMINUM
Report No.: M0355.01-301-44-R1
Date: 09/01/21

SECTION 11
DRAWINGS

The test specimen drawings have been reviewed by Intertek B&C and are representative of the test specimen(s) reported herein. Test specimen construction was verified by Intertek B&C per the drawings included in this report. Any deviations are documented herein or on the drawings.

All drawings are on file with Intertek-ATI.

intertek
Total Quality. Assured.

2524 E. Jensen Ave
Fresno, California 93706

Telephone: 559-233-8705
Facsimile: 717-764-4129
www.intertek.com/building

TEST REPORT FOR ALL WEATHER ARCHITECTURAL ALUMINUM
Report No.: M0355.01-301-44-R1
Date: 09/01/21

SECTION 12
REVISION LOG

REVISION #	DATE	PAGES	REVISION
0	08/06/21	N/A	Original Report Issue
1	09/01/21	Page 5	IG Spacer Type Changed
			Weep Locations Revised